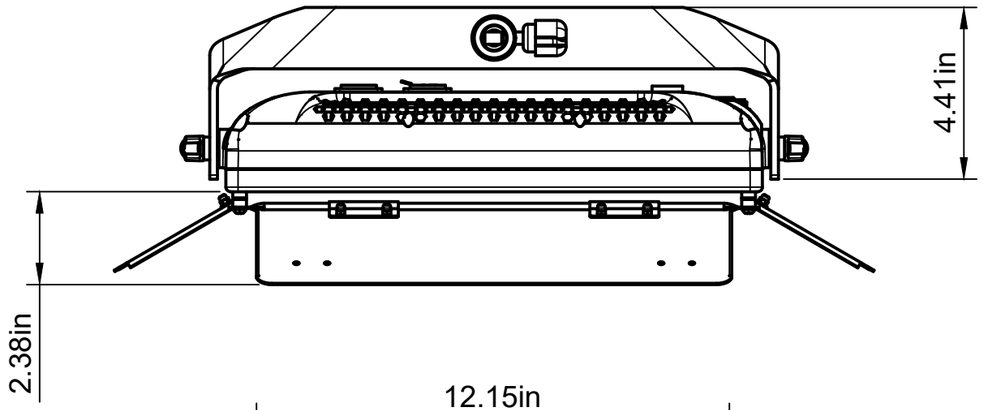

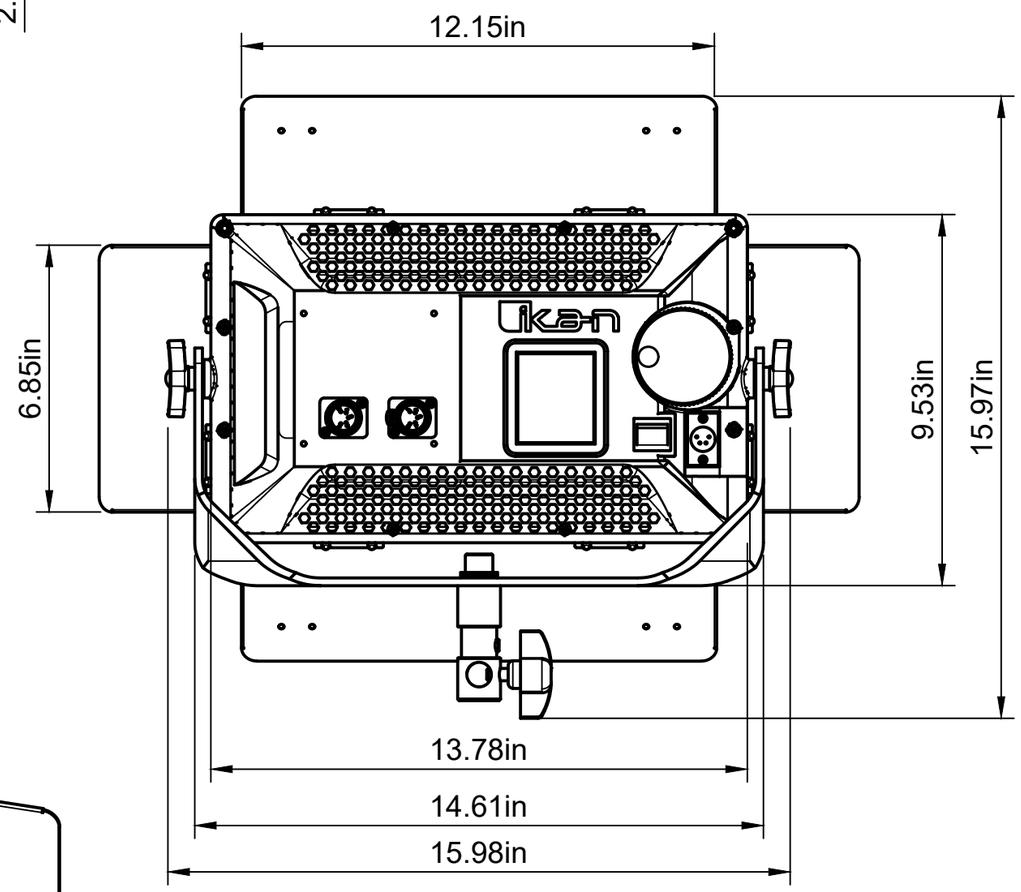

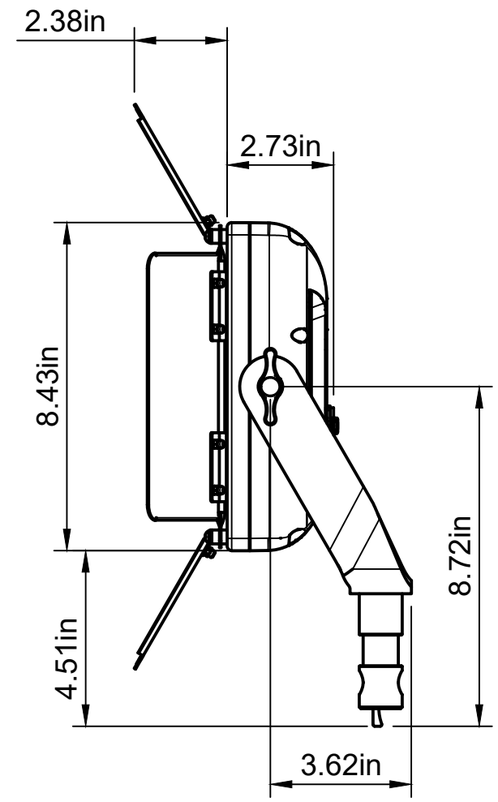

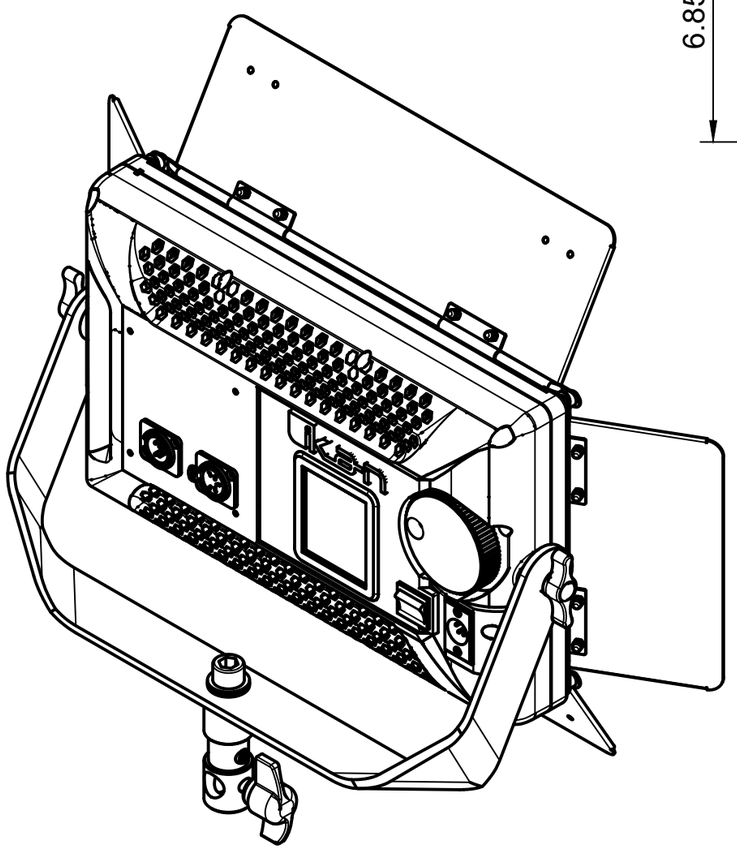

Dept.	Technical reference	Created by	Approved by
	All Dimensions in inches	Ikan Corp. 6/6/2023	
		Document type	Document status
		Title LBX5	DWG No. LBX5
			Rev. / Date of issue: 6/6/2023 / Sheet: 1/1